YK800XC

Arm length 800mm | Maximum payload 20kg

Ordering method

YK800XC - [ ] - [ ] - **RCX340-4** - [ ] - [ ] - [ ] - [ ] - [ ] - [ ] - [ ]

Model	Z axis stroke	Cable length	Controller / Number of controllable axes	Safety standard	Option A (OP.A)	Option B (OP.B)	Option C (OP.C)	Option D (OP.D)	Option E (OP.E)	Absolute battery
	200: 200mm 400: 400mm	3L: 3.5m 5L: 5m 10L: 10m								

Specify various controller setting items. RCX340 ▶ P.542

RCX240 - [ ] - **R** - [ ] - [ ] - [ ] - [ ] - [ ]

Controller	CE Marking	Regeneratizve unit	Expansion I/O	Network option	iVY System	Gripper	Battery
		R					

Specify various controller setting items. RCX240/RCX240S ▶ P.532

Basic specifications

		X axis	Y axis	Z axis		R axis
Axis specifications	Arm length (mm)	450	350	200	400	–
	Rotation angle (˚)	+/-120	+/-145	–		+/-180
AC servo motor output (W)		800	400	400		200
Repeatability Note 1 (XYZ: mm) (R: ˚)		+/-0.02		+/-0.01		+/-0.005
Maximum speed (XYZ: m/sec) (R: ˚/sec)		7.3		1.7		600
Maximum payload (kg)		20				
Standard cycle time: with 2kg payload (sec)		0.57				
R-axis tolerable moment of inertia Note 2 (kgm^2)		0.32				
User wiring (sq × wires)		0.2 × 20				
User tubing (Outer diameter)		ϕ6 × 3				
Travel limit		1.Soft limit, 2.Mechanical stopper (X, Y, Z axes)				
Robot cable length (m)		Standard: 3.5 Option: 5, 10				
Weight (kg)		58				
Degree of cleanliness		CLASS 10 Note 3				
Intake air (Nℓ/min)		60 Note 4				

Note 1. This is the value at a constant ambient temperature. (X,Y axes)
Note 2. There are limits to acceleration coefficient settings.
Note 3. Per 1cf (0.1μm base), when suction blower is used.
Note 4. The necessary intake amount varies depending on the use conditions and environment.

Controller

Controller	Power capacity (VA)	Operation method
RCX340 RCX240-R	2000	Programming / I/O point trace / Remote command / Operation using RS-232C communication

Note. "Harmonic" and "Harmonic drive" are the registered trademarks of Harmonic Drive Systems Inc.
Note. The movement range can be limited by changing the positions of X and Y axis mechanical stoppers. (The movement range is set to the maximum at the time of shipment.)
See our robot manuals (installation manuals) for detailed information.

Our robot manuals (installation manuals) can be downloaded from our website at the address below:
http://global.yamaha-motor.com/business/robot/

YK800XC

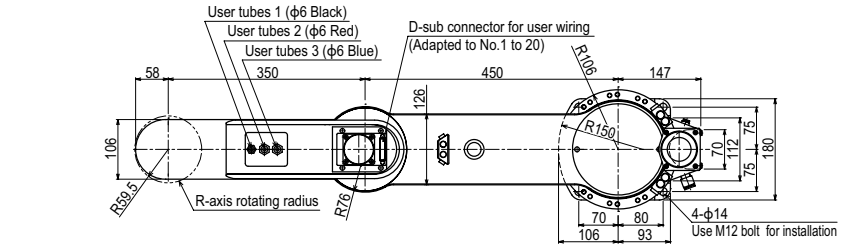

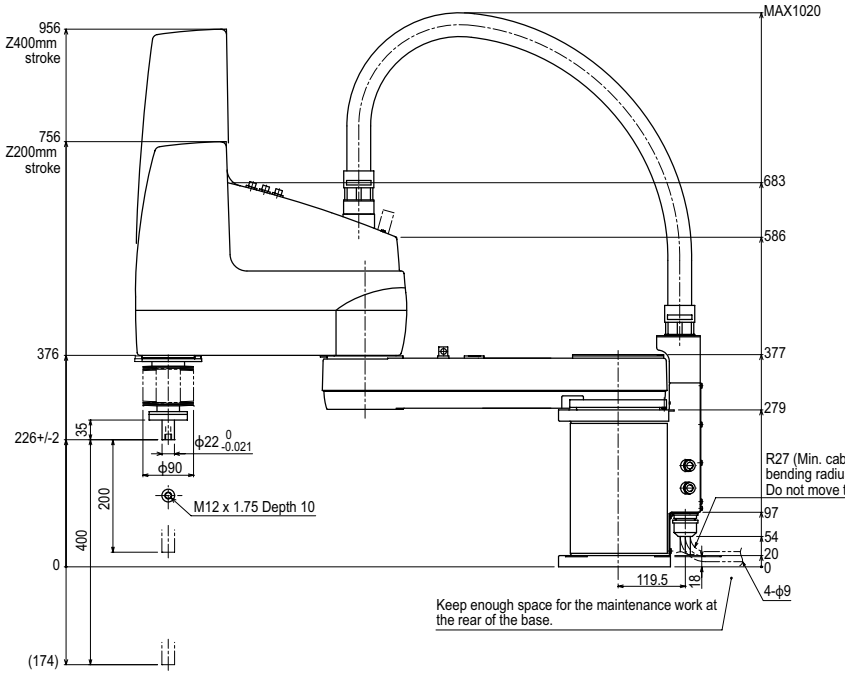

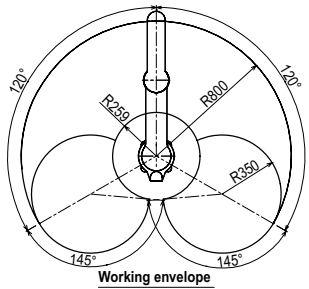

Working envelope

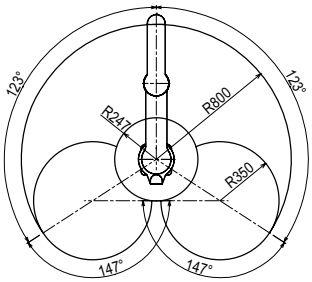

X,Y axis mechanical stopper position

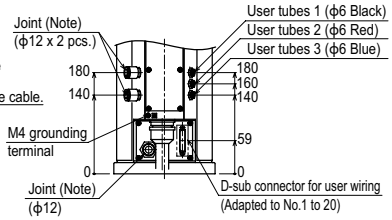

Note: For details about tubing work, refer to the User's Manual.

Controller RCX340 ▶ 542 RCX240 ▶ 532